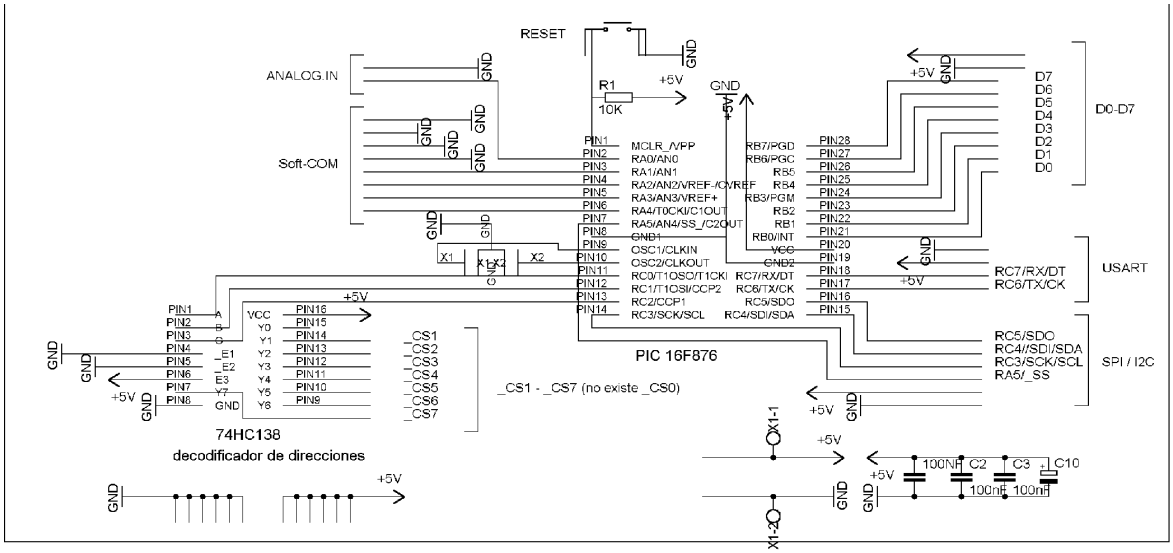
RESET
ANALOG.IN
Soft-COM
R1
10K
+5V
GND
PIC 16F876
MCLR_/VPP
RA0/AN0
RA1/AN1
RA2/AN2/VREF-/CVREF
RA3/AN3/VREF+
RA4/T0CKI/C1OUT
RA5/AN4/SS_/C2OUT
GND1
OSC1/CLKIN
OSC2/CLKOUT
RC0/T1OSO/T1CKI
RC1/T1OSI/CCP2
RC2/CCP1
RC3/SCK/SCL
RB7/PGD
RB6/PGC
RB5
RB4
RB3/PGM
RB2
RB1
RB0/INT
VCC
GND2
RC7/RX/DT
RC6/TX/CK
RC5/SDO
RC4/SDI/SDA
D0-D7
USART
SPI / I2C
RC7/RX/DT
RC6/TX/CK
RC5/SDO
RC4//SDI/SDA
RC3/SCK/SCL
RA5/_SS
_CS1 - _CS7 (no existe _CS0)
74HC138
decodificador de direcciones
X1
X2
X1-1
X1-2
100nF
C2
C3
C10

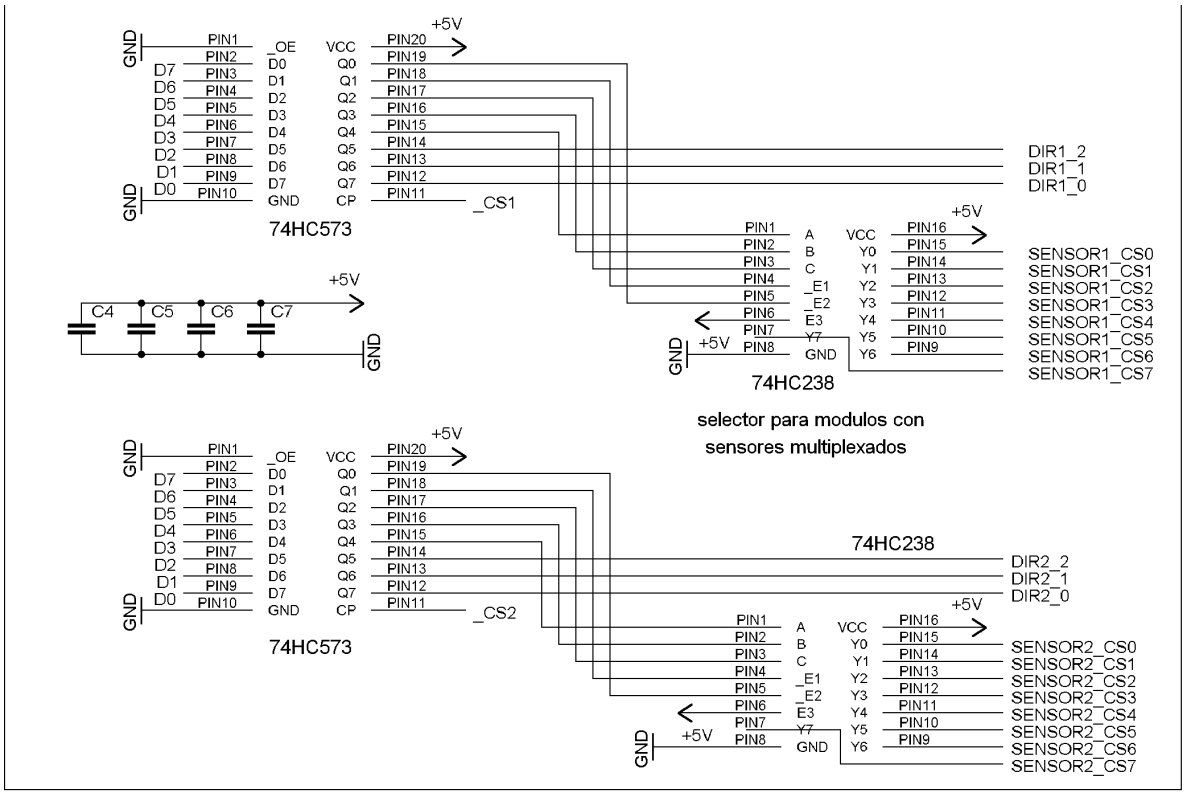
74HC573
_CS1
DIR1_2
DIR1_1
DIR1_0
74HC238
SENSOR1_CS0
SENSOR1_CS1
SENSOR1_CS2
SENSOR1_CS3
SENSOR1_CS4
SENSOR1_CS5
SENSOR1_CS6
SENSOR1_CS7
C4
C5
C6
C7
selector para modulos con
sensores multiplexados
74HC238
DIR2_2
DIR2_1
DIR2_0
74HC573
_CS2
SENSOR2_CS0
SENSOR2_CS1
SENSOR2_CS2
SENSOR2_CS3
SENSOR2_CS4
SENSOR2_CS5
SENSOR2_CS6
SENSOR2_CS7

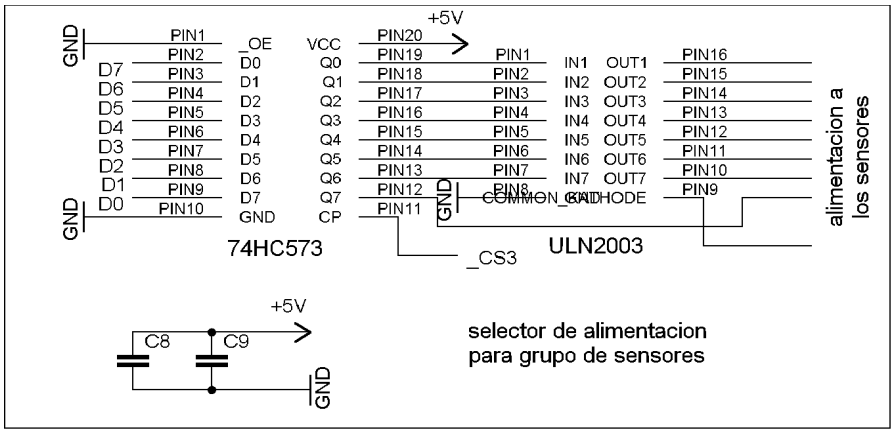
GND
PIN1
PIN2
PIN3
PIN4
PIN5
PIN6
PIN7
PIN8
PIN9
PIN10
D7
D6
D5
D4
D3
D2
D1
D0
_OE
D0
D1
D2
D3
D4
D5
D6
D7
GND
VCC
Q0
Q1
Q2
Q3
Q4
Q5
Q6
Q7
CP
+5V
PIN20
PIN19
PIN18
PIN17
PIN16
PIN15
PIN14
PIN13
PIN12
PIN11
IN1
IN2
IN3
IN4
IN5
IN6
IN7
OUT1
OUT2
OUT3
OUT4
OUT5
OUT6
OUT7
PIN16
PIN15
PIN14
PIN13
PIN12
PIN11
PIN10
PIN9
COMMON_CATHODE
alimentacion a
los sensores
74HC573
ULN2003
_CS3
C8
C9
selector de alimentacion
para grupo de sensores

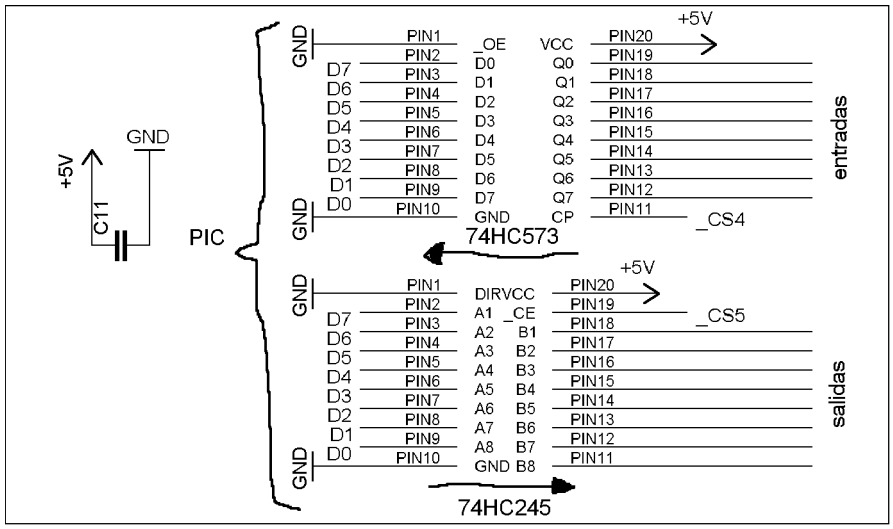
+5V
GND
C11
PIC
GND
PIN1
PIN2
PIN3
PIN4
PIN5
PIN6
PIN7
PIN8
PIN9
PIN10
D7
D6
D5
D4
D3
D2
D1
D0
_OE
D0
D1
D2
D3
D4
D5
D6
D7
GND
VCC
Q0
Q1
Q2
Q3
Q4
Q5
Q6
Q7
CP
PIN20
PIN19
PIN18
PIN17
PIN16
PIN15
PIN14
PIN13
PIN12
PIN11
_CS4
74HC573
entradas
DIRVCC
A1
A2
A3
A4
A5
A6
A7
A8
GND
_CE
B1
B2
B3
B4
B5
B6
B7
B8
_CS5
74HC245
salidas

SONSÓN II

DANIEL SERGUEO
23.00HGY @ TOSUGRSEG